CAPACITY PLAN

WITH DEADWEIGHT SCALE

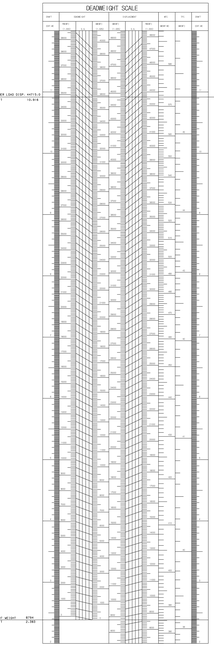

SEASONAL FREEBOARD	FREEBOARD (MM)	DRAFT (EXT) (M)	DISPLACEMENT (TON)	DEADWEIGHT (TON)
TF	4250	11.390	45,727	36,933
F	4477	11.163	44,718	35,924
T	4497	11.143	45,745	36,951
S	4724	10.916	44,715	35,921
W	4951	10.689	43,687	34,893

INTERNATIONAL TONNAGE	
GROSS TONNAGE	23,054
NET TONNAGE	11,349

CARGO(GRAIN)

(S.G. = FILL RATIO × 1.000 × 100 %)

COMPARTMENTS	LOCATION (FRAME)	VOLUME 100% (M3)	WEIGHT (MT)	CENTER OF GRAVITY V.C.G FROM B.L.(M)	CENTER OF GRAVITY L.C.G FROM MIDSHIP(M)	! MAX. (%4)
NO.1 CARGO HOLD	184.0 - 215.0	5958.6	5958.6	9.501	63.943	16015
NO.2 CARGO HOLD	147.0 - 185.2	9735.9	9735.9	9.473	40.918	29232
NO.3 CARGO HOLD	110.0 - 147.0	9735.9	9735.9	9.473	-14.382	29232
NO.4 CARGO HOLD	72.0 - 110.0	9735.9	9735.9	9.473	-14.382	29232
NO.5 CARGO HOLD	39.0 - 74.2	8897.4	8897.4	9.876	-41.454	27297
TOTAL		44203.7	44203.7			

CARGO(BALE)

(S.G. = FILL RATIO × 1.000 × 100 %)

COMPARTMENTS	LOCATION (FRAME)	VOLUME 100% (M3)	WEIGHT (MT)	CENTER OF GRAVITY V.C.G FROM B.L.(M)	CENTER OF GRAVITY L.C.G FROM MIDSHIP(M)	! MAX. (%4)
NO.1 CARGO HOLD	185.2 - 215.0	5865.0	5865.0	9.504	64.399	15507
NO.2 CARGO HOLD	148.2 - 184.0	9568.6	9568.6	9.477	40.930	28203
NO.3 CARGO HOLD	111.2 - 147.0	9568.6	9568.6	9.477	-13.180	28203
NO.4 CARGO HOLD	74.2 - 110.0	9568.6	9568.6	9.477	-14.570	28203
NO.5 CARGO HOLD	39.0 - 73.0	8887.3	8887.3	9.880	-41.334	26880
TOTAL		43458.1	43458.1			

WATER BALLAST

(S.G. = FILL RATIO × 1.025 × 100 %)

COMPARTMENTS	LOCATION (FRAME)	VOLUME 100% (M3)	WEIGHT (MT)	CENTER OF GRAVITY V.C.G FROM B.L.(M)	CENTER OF GRAVITY L.C.G FROM MIDSHIP(M)	! MAX. (%4)
NO.1 W.B.TK(P)	184.0 - 218.0	973.0	997.3	6.063	65.730	1848
NO.1 W.B.TK(S)	184.0 - 218.0	973.0	997.3	6.063	65.730	1848
NO.2 W.B.TK(P)	147.0 - 184.0	1408.5	1443.7	5.606	40.310	4482
NO.2 W.B.TK(S)	147.0 - 184.0	1408.5	1443.7	5.606	40.310	4482
NO.3 W.B.TK(P)	110.0 - 147.0	1423.8	1459.4	5.583	-12.675	4582
NO.3 W.B.TK(S)	110.0 - 147.0	1423.8	1459.4	5.583	-12.675	4582
NO.4 W.B.TK(P)	73.0 - 110.0	1422.3	1457.8	5.588	-15.063	4570
NO.4 W.B.TK(S)	73.0 - 110.0	1422.3	1457.8	5.588	-15.063	4570
NO.5 W.B.TK(P)	36.0 - 73.0	1382.7	1420.3	5.350	-42.818	3099
NO.5 W.B.TK(S)	36.0 - 73.0	1382.7	1420.3	5.350	-42.818	3099
F.P.TK(C)	216.0 - 229.4	854.5	875.9	5.310	90.204	1190
A.P.TK(C)	-4.4 - 11.0	279.7	286.7	5.774	-80.924	3667
TOTAL		14360.8	14719.6			

HEAVY FUEL OIL

(S.G. = FILL RATIO × 0.990 × 98.0 %)

COMPARTMENTS	LOCATION (FRAME)	VOLUME 100% (M3)	WEIGHT (MT)	CENTER OF GRAVITY V.C.G FROM B.L.(M)	CENTER OF GRAVITY L.C.G FROM MIDSHIP(M)	! MAX. (%4)
NO.1 H.F.O.TK(P)	210.0 - 218.0	435.1	422.1	9.375	75.927	159
NO.1 H.F.O.TK(S)	210.0 - 218.0	435.1	422.1	9.407	76.503	159
NO.2 H.F.O.TK(P)	36.0 - 39.0	233.5	226.5	9.138	-55.444	296
NO.2 H.F.O.TK(S)	36.0 - 39.0	233.5	226.5	9.138	-55.444	296
NO.1 H.F.O.SETT.TK(P)	36.0 - 38.0	28.9	28.0	11.358	-55.394	3
NO.1 H.F.O.SETT.TK(P)	36.0 - 38.0	28.9	28.0	11.358	-55.394	3
NO.2 H.F.O.SERV.TK(P)	36.0 - 38.0	16.2	15.7	11.365	-55.954	1
NO.2 H.F.O.SERV.TK(P)	36.0 - 38.0	16.2	15.7	11.365	-55.954	1
TOTAL		1442.5	1399.6			

* REMARKS
1. AD FOR L.C.G.: "-" (MINUS SIGN) MEANS "AFT FROM MIDSHIP"
   "+" (PLUS SIGN) MEANS "FORWARD FROM MIDSHIP"
2. WT : METRIC TON
   M : METER

*. LOCAL STRENGTH OF CARGO HOLD INNER BOTTOM
- UNIFORM LOAD : 21.0 MT/M² FOR ALL HOLDS.
- STEEL COIL LOADING :
  25TONS (1.8M Dia X 1.5M Wide) 2 Tiers WITH 3 Rows of DUNNAGE
- WHEELED VEHICLE LOADING :
  8TON AXLE LOAD OF FORK-LIFT TRUCK(20TON AXLE LOAD FOR LOADED CASE) WITH PNEUMATIC TIRES (TIRE PRINT SIZE : 310mmX550mm)
- CONTAINER LOADING :
  24 MT/TEU FOR NO.1,2,3,4 & 5 HOLDS.
  30 MT/FEU FOR NO.2,3 & 4 HOLDS.
- GRABE20 : 20 TONS
- TWO TIER OF CONTAINER ON HATCH COVER
  STACK LOAD : 48 TON FOR 20 FT CONTAINER AND 60 TON FOR 40 FT
- HATCH COVER, UNIFORMLY DISTRIBTED PAY LOAD OF 34.3 KN/M²

LUBRICATING OIL

(S.G. = FILL RATIO × 0.900 × 98.0 %)

COMPARTMENTS	LOCATION (FRAME)	VOLUME 100% (M3)	WEIGHT (MT)	CENTER OF GRAVITY V.C.G FROM B.L.(M)	CENTER OF GRAVITY L.C.G FROM MIDSHIP(M)	! MAX. (%4)
NO.1 CYL.OIL.STOR.TK(P)	27.0 - 30.0	20.9	18.4	12.815	-62.700	2
NO.2 CYL.OIL.STOR.TK(P)	30.0 - 32.0	13.9	12.3	12.815	-60.700	2
S/T L.O.SUMP.TK(P)	20.0 - 22.0	7.0	6.2	13.165	-64.200	0
S/T L.O.SETT.TK(S)	20.0 - 22.0	7.0	6.2	13.165	-64.200	0
M.L.O.STOR.TK(S)	27.0 - 32.0	29.5	26.1	12.815	-62.167	5
M.L.O.SUMP.TK(S)	19.0 - 29.0	13.2	12.4	11.118	-64.653	7
S/T L.O.SUMP.TK(S)	13.0 - 17.0	2.0	1.8	1.628	-72.668	1
M.L.O.SETT.TK(S)	17.0 - 20.0	10.5	9.3	13.165	-61.500	1
TOTAL		118.2	104.9			

MISCELLANEOUS

(S.G. = FILL RATIO × 0.900 × 98.0 %)

COMPARTMENTS	LOCATION (FRAME)	VOLUME 100% (M3)	WEIGHT (MT)	CENTER OF GRAVITY V.C.G FROM B.L.(M)	CENTER OF GRAVITY L.C.G FROM MIDSHIP(M)	! MAX. (%4)
BILGE HOLDING TK(C)	11.0 - 16.0	21.3	18.8	1.071	-73.565	13
SLUDGE TK(P)	31.0 - 34.0	11.2	9.9	6.810	-59.678	22
DILY. BILGE TK(P)	23.0 - 25.0	2.0	1.8	1.243	-67.158	2
GREY W. STOR.TK	16.0 - 23.0	20.3	16.1	11.158	-72.601	34
TOTAL		58.8	51.5			

FD OVERFLOW

(S.G. = FILL RATIO × 0.990 × 98.0 %)

COMPARTMENTS	LOCATION (FRAME)	VOLUME 100% (M3)	WEIGHT (MT)	CENTER OF GRAVITY V.C.G FROM B.L.(M)	CENTER OF GRAVITY L.C.G FROM MIDSHIP(M)	! MAX. (%4)
F.O.OVERFLOW TK	32.0 - 36.0	17.2	16.7	1.034	-58.350	13
TOTAL		17.2	16.7			

FRESH WATER

(S.G. = FILL RATIO × 1.000 × 100 %)

COMPARTMENTS	LOCATION (FRAME)	VOLUME 100% (M3)	WEIGHT (MT)	CENTER OF GRAVITY V.C.G FROM B.L.(M)	CENTER OF GRAVITY L.C.G FROM MIDSHIP(M)	! MAX. (%4)
F.W.TK(S)	0.0 - 6.0	98.5	98.5	13.690	-82.872	51
F.W.TK(P)	0.0 - 6.0	98.5	98.5	13.690	-82.872	51
TOTAL		197.0	197.0			

DIESEL OIL

(S.G. = FILL RATIO × 0.900 × 98.0 %)

COMPARTMENTS	LOCATION (FRAME)	VOLUME 100% (M3)	WEIGHT (MT)	CENTER OF GRAVITY V.C.G FROM B.L.(M)	CENTER OF GRAVITY L.C.G FROM MIDSHIP(M)	! MAX. (%4)
NO.1 M.O.D.STOR.TK(P)	25.0 - 32.0	36.4	32.1	1.140	-62.242	49
NO.1 M.O.D.STOR.TK(S)	19.0 - 36.0	60.5	53.4	1.142	-62.553	80
NO.2 M.O.D.STOR.TK(P)	7.0 - 11.0	98.5	86.9	13.549	-78.250	85
NO.2 M.O.D.STOR.TK(S)	7.0 - 11.0	98.5	86.9	13.549	-78.250	85
MOD SER. TK	32.0 - 36.0	15.1	13.3	12.815	-58.350	1
TOTAL		309.0	272.6			

CARGO HOLD CONFIGURATION

(DIMENSIONS IN THE BLANK TO BE REFERED ONLY)

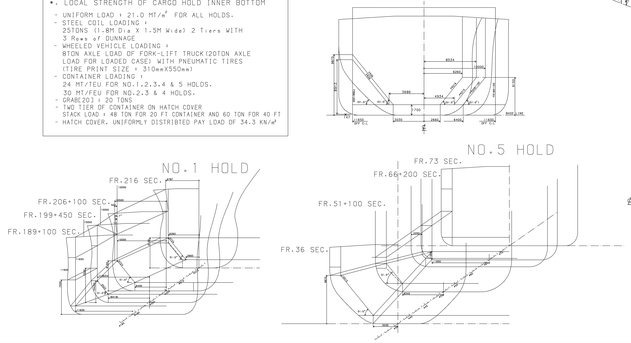

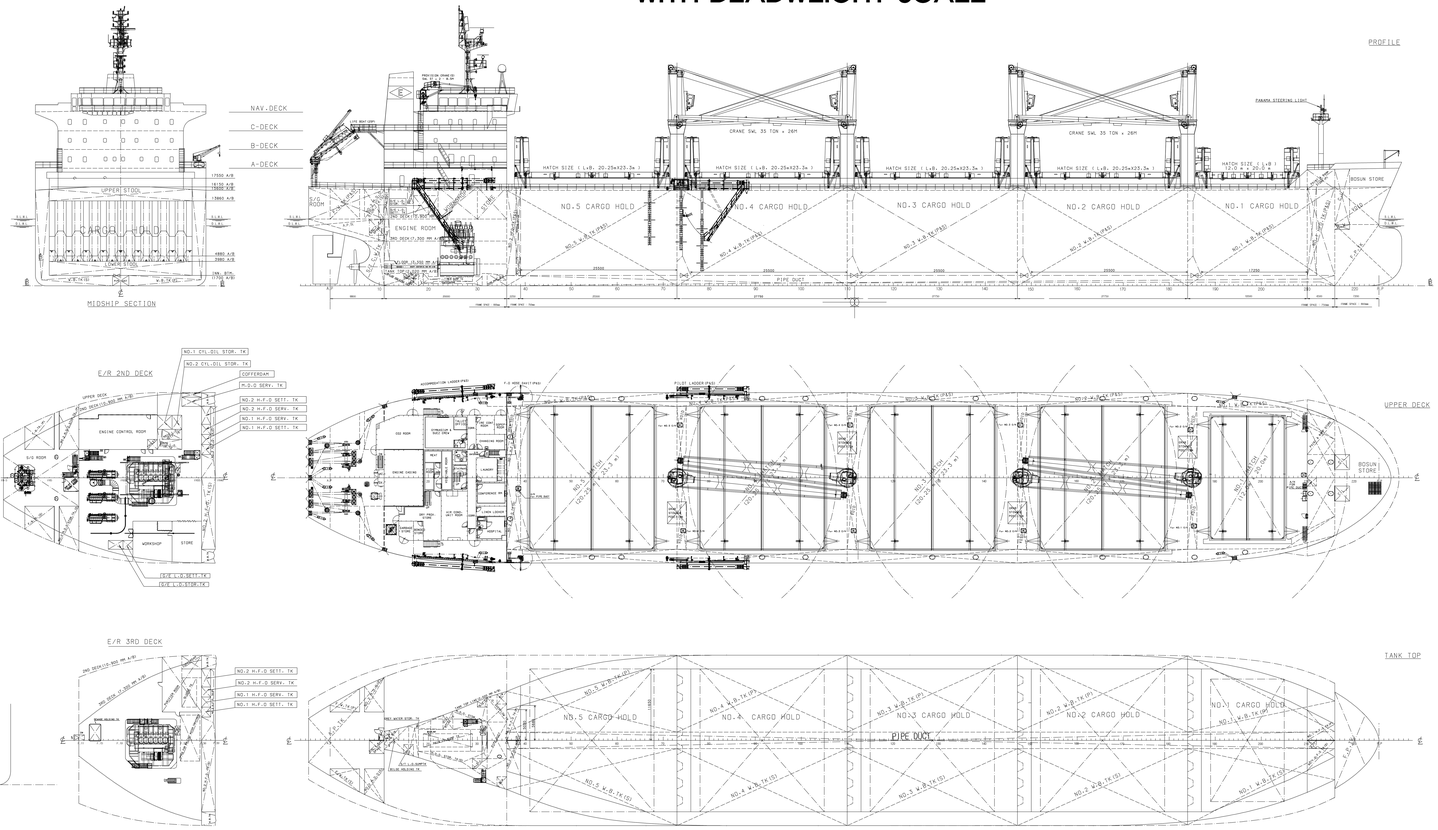

DATE	REV.	MARK	DESCRIPTION	DRAWN	DESIGNED	APPROVED
2010.05.02	0R1		ORIGINALLY PREPARED FOR APPROVAL	M.S.HEO	S.H.OH	Y.K.PARK
2010.09.20	R1		ADDED / MODIFIED AS PER OWNER'S COMMENT - THE CLASS NOTATION(CLASS NOTATION HOLDER) - THE CLASS NOTATION(CIL SOLAS) - THE DIMENSIONS OF THE HOLDS, BOTTOM VIEW - THE SIZE OF HATCH COVER, HATCH OPENING - OPENING LENGTH AND WIDTH OF HATCH OPENING - HEIGHT OF INNER BOTTOM, LOWER & UPPER STOOL - THE LOCATION OF ENGINE ROOM BULKHEAD - ALLOWABLE DECK LOADING (KG), TANK TOP(UNIFORM, COIL), POLE LIFT, DRAG & CONTAINERED HATCH - LATTICE LOAD AND CONTAINER WEIGHT	M.S.HEO	S.H.OH	Y.K.PARK
2010.08.11	R2		MODIFIED AS BELOW AS PER OWNER'S COMMENT - TANKS NO. IN TANK PLAN AND TANK CAP. IN TABLE.	M.S.HEO	S.H.OH	Y.K.PARK
2011.01.17	F1A		FINALLY PREPARED FOR HOAS.	M.S.HEO	S.H.OH	Y.K.PARK

PRINCIPAL PARTICULARS

LENGTH	O. A.	AST.	178.33 M
LENGTH	B. P.		171.00 M
BREADTH	(MLD)		27.80 M
DEPTH	(MLD)		15.80 M
DRAFT	DESIGN (MLD)		9.80 M
	SCANT. (MLD)		10.90 M

MAIN ENGINE: HYUNDAI-B&W 6S46MC-C8
MCR : 7,860 kW X 129.0 R.P.M
NCR : 5,670 kW X 117.0 R.P.M

SERVICE SPEED AT DESIGN LOAD (NCR WITH 15% S.M): Abt. 14.0 Knots

CLASSIFICATION : ABS
+1A1 (E), Bulk Carrier, BC-A(Holds 2&4 may be empty), +AMS, +ACCU, with description in the Record : ESP,CPS,UWILD,TCM, SH, SHCM

FLAG: Marshall Islands
FREEBOARD TYPE: B
COMPLEMENT: 25+6P

CLASSIFICATION: C

CAUTION
THIS DRAWING OR DOCUMENT IS PROPERTY OF HYUNDAI MIPO DOCKYARD CO., LTD. AND IT MUST NOT BE PARTIALLY OR WHOLLY COPIED OR USED FOR ANY OTHER PURPOSE WITHOUT PRIOR WRITTEN PERMISSION OF HYUNDAI MIPO DOCKYARD CO.,LTD.

DEPT. WEIGHT NAME: 5610 BASIC DESIGN DEPT	SHIP TYPE: 36,000 DWT CLASS BULK CARRIER
TEL NO.: 3758 DEPT NO.: 6045	DEPT NAME
DATE: 2010.12.08	NAME OF DRAWING: CAPACITY PLAN WITH DEADWEIGHT SCALE
APPROVED: Y. K. PARK	
CHECKED: S. H. OH	
DRAWN: M.S. HEO	SCALE: 1/200
DRAWING NO.: 1A0000002	REV. NO.: F1A
HYUNDAI MIPO DOCKYARD CO., LTD.	CONSOLIDATED NO.:

A3 (420 X 297)